La Creu

IMC 05-4380

1

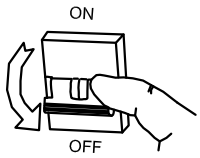

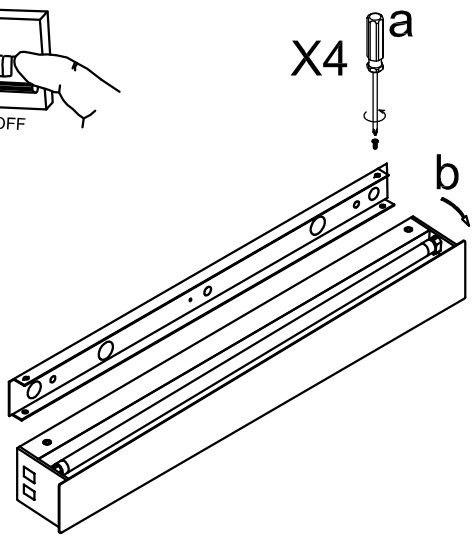

2

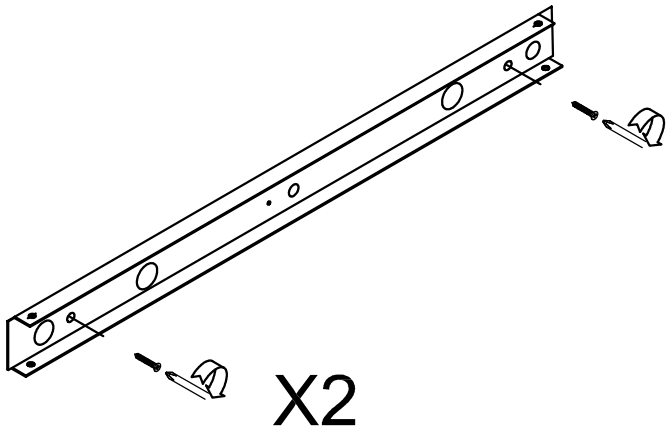

3

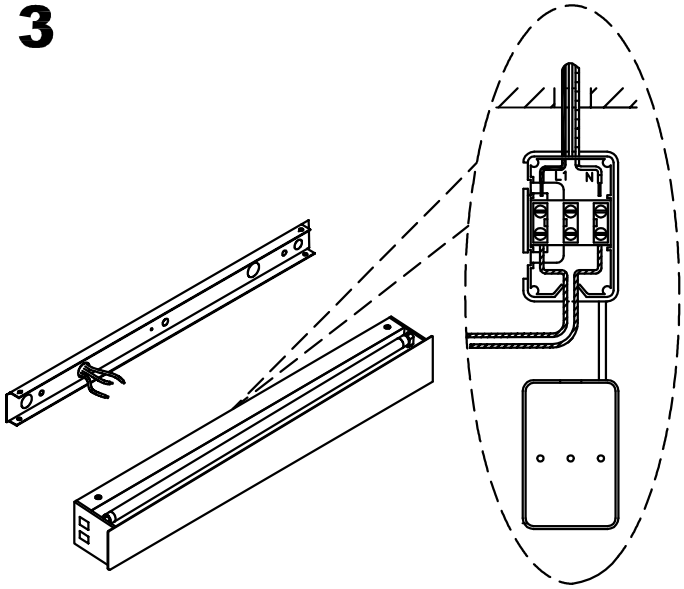

4

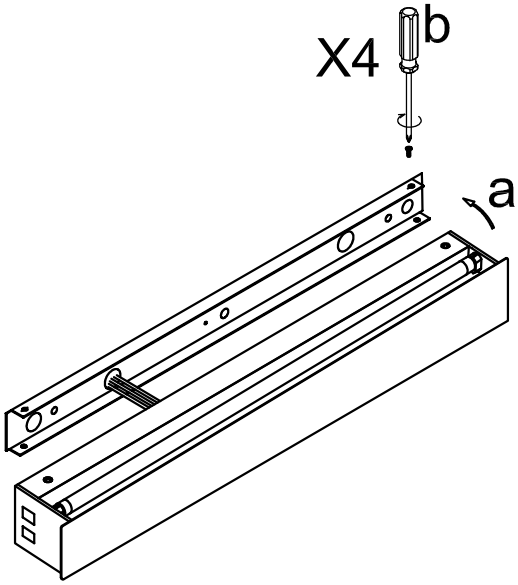

5

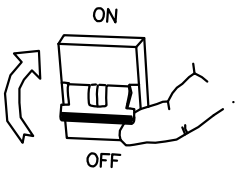

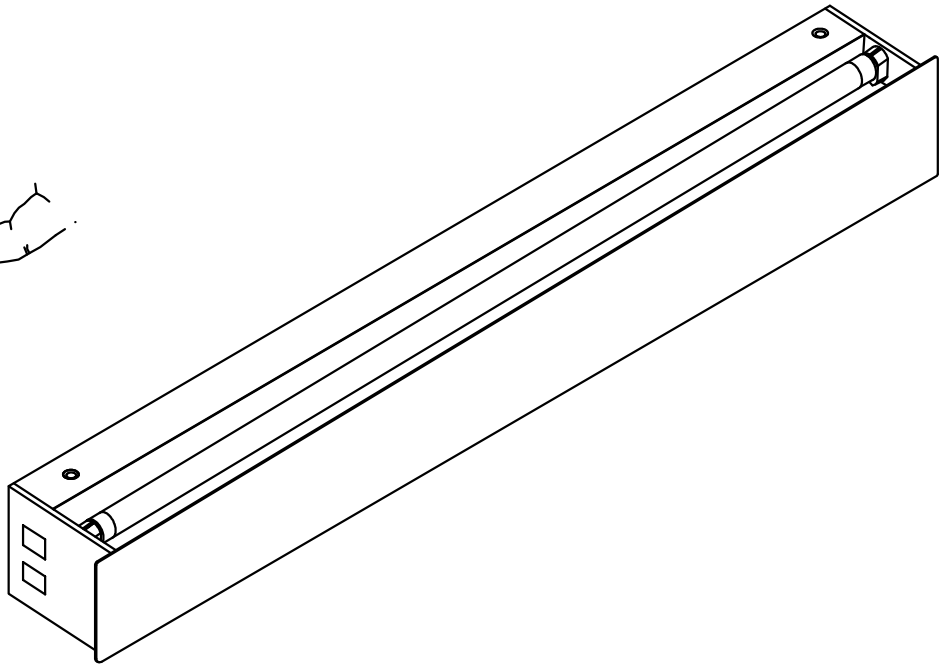

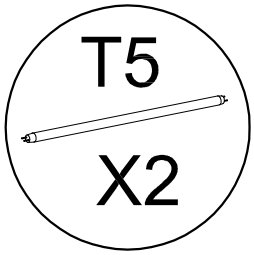

July/02/10